PRODUCT BASIC INFORMATION

OCEANLINK 85MM GPS SPEEDOMETER

Best Performance in Outdoor Environments

AMZ YACHTING

85MM MASTER GPS SPEEDOMETER

Precision CAN Instrumentation for Leisure Boats

KEY FEATURES

- Protection to IP x7 front and rear
- Operating Temperature -20°C/+70°C
- 1x NMEA2000 Connector
- 1x EasyLink databus
- 1x J1939 input
- 1x Frequency input
- 2x Analog resistive input
- Reverse polarity protection

The new OceanLink 85mm Master GPS Speedometer features an embedded GPS antenna, a DOT matrix LCD and NMEA2000® connectivity. The LCD displays information like position, date and time and - if connected via NMEA2000® network – sea water temperature, depth and speed through water information. The IPX7 waterproof design allows the installation on open or enclosed boats. Up to 16 satellite gauges of 52mm each, can be connected thanks to the integrated EasyLink connectivity.

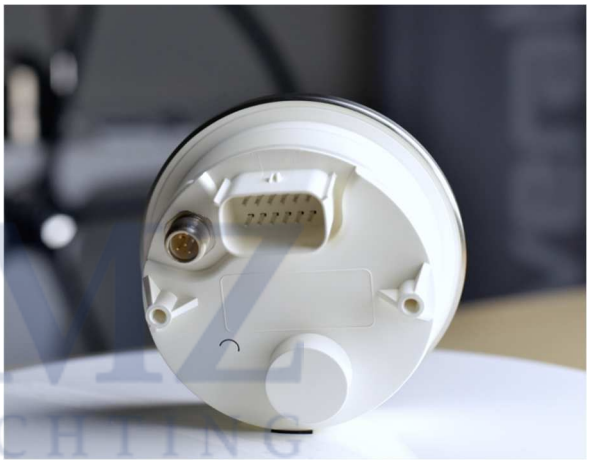

AMZ YACHTING

TECHNICAL DATA

Housing	Material: PC-FR
Bezel	Material: PC-FR
Display	Dot matrix LCD Resolution: 132x32
GPS-Channel	Support 66-channel
GPS Update Frequency	10Hz
Time to First Fix	Cold : 33s (typical) Warm: <1sec (typical)
Position Accuracy	Autonomous 3.0m
GPS Datum	WGS-84 (default)
Operating Temperature	-20°C to 70°C
Storage Temperature	-40°C to 85°C
Operating Voltage	9 -32 VDC
Current Consumption	< 150mA @ 12V
Protection Class	IEC 60495 exposed equipment IPx7 front and rear (plug in)
EMC	IEC 60945:2002 / ISO7637-2
Approval	CE, RoHS, NMEA2000®
Data Input	NMEA2000, J1939, frequency 0-4KHz, resistive 0-400Ohm

CE
REACH COMPLIANT
UK CA
UL
NMEA 2000 GATEWAY
IPX7 COMPLIANT
FREQUENCY INPUT
RESISTIVE INPUT

CONNECTORS

Molex MX150

Pin	Wire Color	Signal
1	Red	Power (12V/24V)
2	Black	Ground
3	White	Alarm output
4	Green	RPM sensor input
5	Blue	SAE J1939 - CAN Low
6	Blue/White	SAE J1939 - CAN High
7	Yellow	Term. 15 – Ignition plus
8	Gray	Sensor input 1 (0-400 Ohm)
9	Brown	Sensor input 2 (0-400 Ohm)
10	Orange	Illumination
11	Light Blue	EasyLink Power (leads to 3 pole connector)
12	Violet	EasyLink Signal (leads to 3 pole connector)

M12-5Pin

Pin	Signal
1	Shield
2	Power (12V)
3	GND
4	CAN-High
5	CAN-Low

AMP Superseal

Pin	Signal
1	EasyLink - Power
2	EasyLink - GND
3	EasyLink - Data

Molex MX150

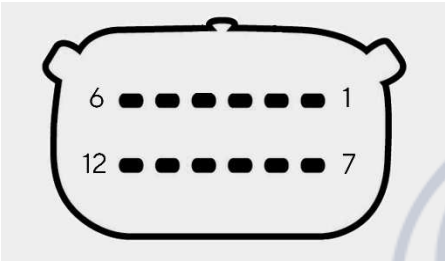

M12-5Pin

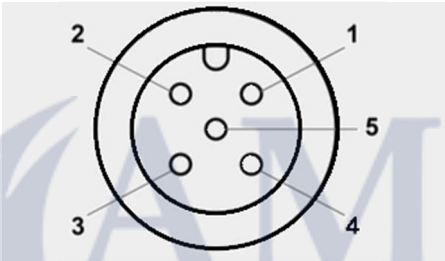

AMP Superseal

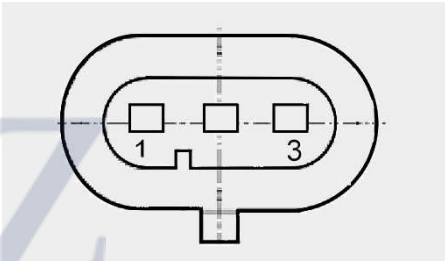

AMZ YACHTING

DIMENSIONS

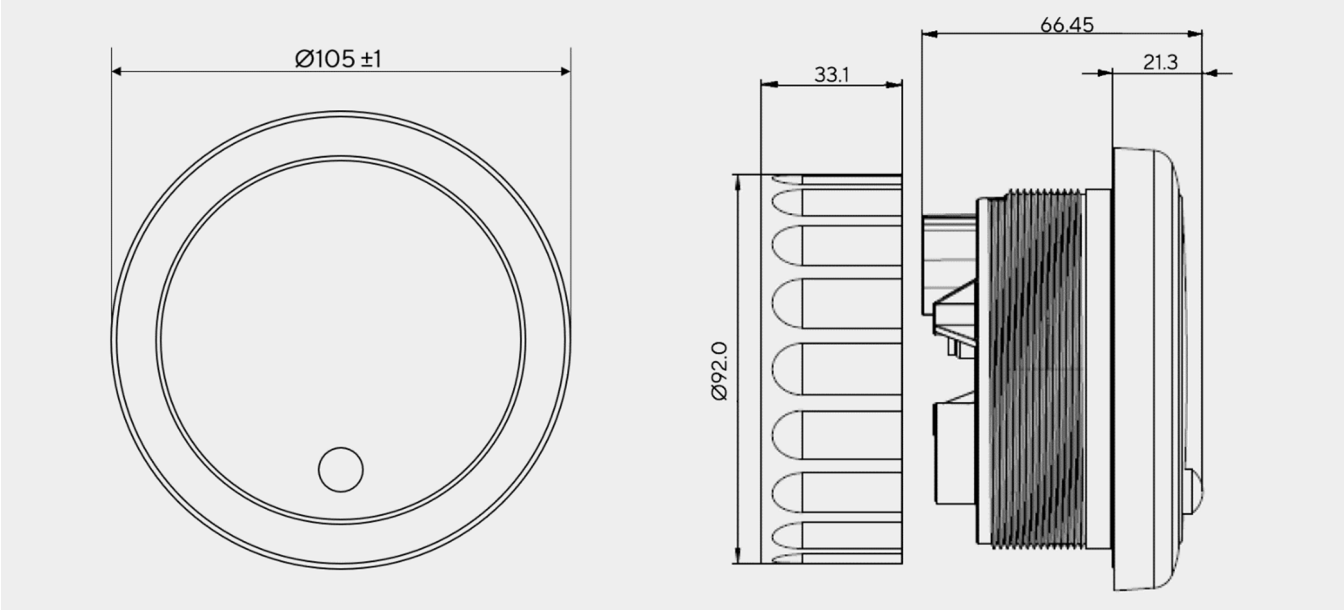

PRODUCT VARIANTS

Part Number	RPM range	Color
A2C1065660001	3'000	Black
A2C1065670001	3'000	White
A2C1065720001	5'000	Black
A2C1065800001	5'000	White
A2C1065810001	7'000	Black
A2C1065820001	7'000	White

Analog to NMEA gateway included.

NMEA 2000 GATEWAY

SUPPORTED CAN MESSAGES

NMEA 2000

System Time	126992
Rudder	127245
Engine parameters, Rapid update	127488
Engine Parameters, Dynamic	127489
Transm. Parameters, Dynamic	127493
Fluid Level	127505
DC Detailed Status	127506
Battery Status	127508
Water Depth	128267
Environmental Parameters	130311
Temperature	130312
Direction Data	130577

SAE J1939

Engine Speed	61444/190
Total engine operating hours	65253/247
Engine oil temperature	65262/175
Engine oil pressure	65263/100
Engine coolant pressure	65263/109
Boost pressure	65270/102
Exhaust gas temperature	65270/173
Transmission oil pressure	65272/127
Transmission oil temperature	65272/177
Fuel level	65276/96
Engine coolant temperature	65292/110
Engine oil level	EFL/P1 /98
Battery voltage	VEP1 /168
Battery current	VEP1 /114

AMZ YACHTING

ACCESSORIES

Description	Part Number
Power and Data cable – OL 85mm	A2C1433330001
EasyLink extension cable	A2C59500139
Spinlock 85mm	A2C1376090001
Bezel 85mm - Chrome	A2C1141580001
Bezel 85mm - Black	A2C1111380001
Bezel 85mm - White	A2C1352140001

Plug-and-Play

Serial connection

OCEANLINK 52MM SATELLITES

- OceanLink look-and-feel
- Analog round instrument style
- EasyLink interface
- Up to 16 satellites on each master
- Trim, Rudder, Voltmeter, Ammeter, Fuel-, Freshwater- and Wastewater level, Pyrometer, Gear and Engine Oil Pressure and Temperature, Coolant temperature, Boost

AMZ
YACHTING

OUTDOOR INSTRUMENTATION
ENGINEERED IN SWITZERLAND

Veratron AG / Industriestrasse 18 / 9464 Rüthi / Switzerland
T +41 71 7679 111 / info@veratron.com / veratron.com

The information provided in this brochure contains only general descriptions or performance characteristics, which do not always
apply as described in case of actual use or which may change as a result of further development of the products. This information is merely a technical description of the product. It is not meant or intended to be a special guarantee for a particular quality or particular durability. An obligation to provide the respective characteristics shall only exist if expressly agreed in the terms of contract. We reserve the right to make changes in availability as well as technical changes without prior notice.
Veratron AG / English © 2021